REVISIONS				
ECO	REV	DESCRIPTION	APPR	DATE
3435	B	Add note for clamp screw torque and its tolerance	JZ	06/08/06

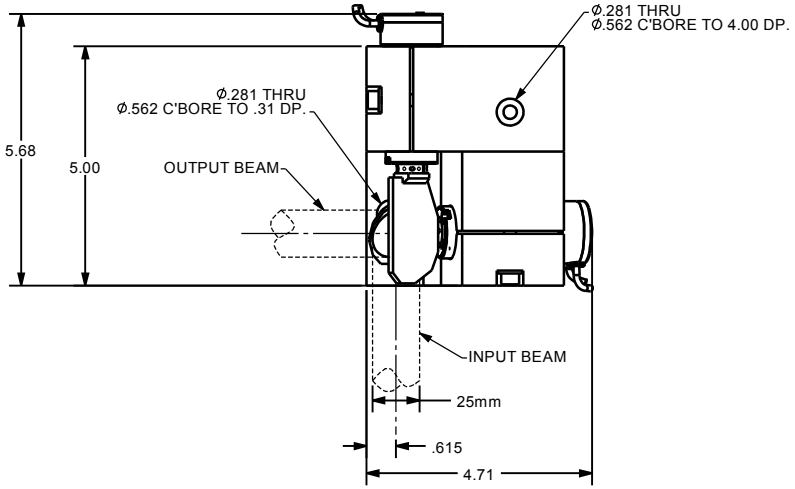

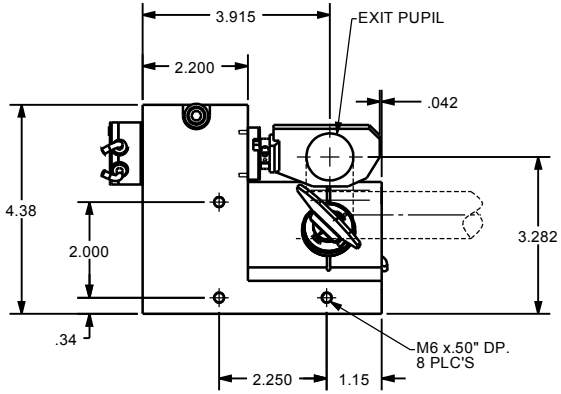

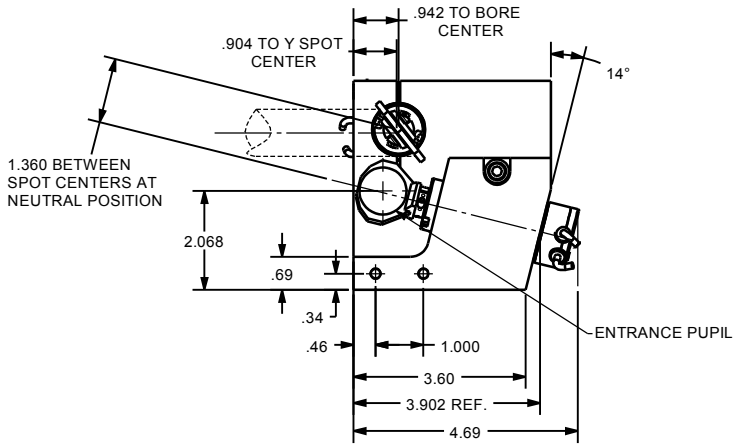

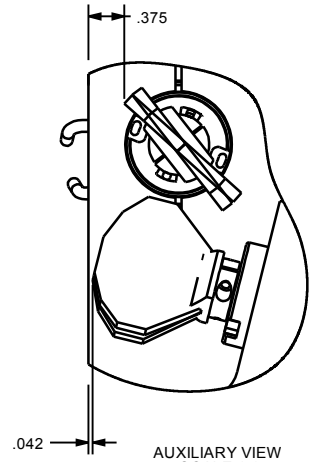

AUXILIARY VIEW
SCALE 1:1
DIMENSIONS ON THIS VIEW REPRESENT SMALLEST DISTANCES DURING MIRRORS' FULL ANGULAR RANGE.

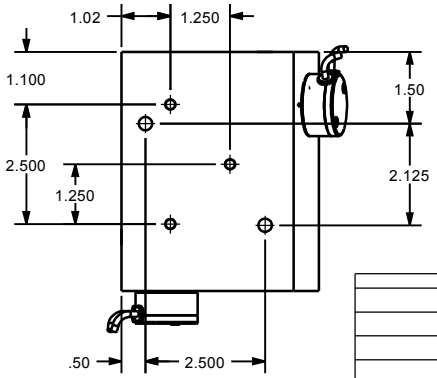

NOTES:
1. ALL DIMENSIONS ARE FOR REFERENCE ONLY.
2. RECOMMENDED X-Y MOUNT CLAMP SCREW TORQUE =120 in*lbf (13.56 N*m)
3. CLAMP SCREW TORQUE TOLERANCE = ±5%%.

These drawings and specifications are the property of CAMBRIDGE TECHNOLOGY and shall not be reproduced, or copied, or used as the basis for the manufacture, or sale of apparatus without the written permission of CAMBRIDGE TECHNOLOGY, INC.

UNLESS OTHERWISE SPECIFIED
DIMENSIONS ARE IN INCHES
TOLERANCES
.XX± .010 ANGLES± 0°-30'
.XXX± .005
.XXXX± .0005
[ ] INDICATES mm
SURFACE ROUGHNESS 63√
BREAK ALL SHARP EDGES

MATERIAL N/A
FINISH N/A
USED ON

DRN
ENG AA 04/28/03
APPR
PROJECTION
DRAWING SIZE: C

CAMBRIDGE TECHNOLOGY, INC.
109 SMITH PLACE
CAMBRIDGE, MA 02138 - USA

TITLE
6240
X-Y MOUNT INTERFACE, RH
Ø25mm BEAM, 40° OPT.

DRW. NO. **D05447** REVISION **B**
SCALE 1:2 SHEET 1 OF 1

MODEL NAME: refl_beam